Electrolux PROFESSIONAL

Waste Management System Free Standing Compact Integrated Pulper - 300 kg/hour

ITEM #

MODEL #

NAME #

SIS #

AIA #

616020 (WMSCP30F) Free Standing Compact Integrated Pulper - 300 kg/hour - 400V/3/50-60

Short Form Specification

Item No.

Integrated machine (disposer, pump, dewatering unit and external 15 mt pipe) which breaks-up daily food waste up to 300 kg/hour via a grinder and then thanks to the centrifugal dewatering press extracts the water from the organic waste reducing the volume up to 80%. The grinder is equipped with 2 protection systems. An overload protection system prevents the motor from overheating when too much food is introduced and and a magnetic system blocks the flatware if introduced accidentally. The centrifugal dewatering press removes the water content from the food to produce the treated waste which is then dropped into a container. The high-revolving stainless steel filter is internally equipped with a revolving spiral with brushes to ensure that the 1mm holes do not become blocked. The filter is constantly and automatically cleaned during operation and also for 1 minute after the machine is switched off. Disposer/pulper grinding ring and cutting teeth are in corrosion free stainless steel. The centrifugal propeller below the grinding teeth ensures an increased output and no pipe blockage when the waste is transferred. The control panel incorporates on/off and emergency cut-out buttons. IP54 protection. Supplied with cutlery magnet. Free standing.

APPROVAL:

Main Features

- Capacity of 300 kg of waste per hour.
- Used to break-up organic waste via grinder, allowing slurry transportation to the centrifugal dewatering press.
- Self cleaning cycle with warm water and a small quantity of neutral soap.
- Cutlery magnet to avoid magnetic objects from accidentally entering the grinder.
- Grinder to have overload protection system to protect the motor from overheating.
- Centrifugal dewatering press removes the water content of the food to produce treated waste that drops into a bucket.
- High speed revolving filter within the dewatering press removes water. Inside the filter, a revolving spiral with brushes allows the filter holes to remain clog-free.
- Filter constantly and automatically cleaned during operation with warm water.
- Centrifugal pump guarantees an increased output with no pipe blockage.
- On/off button and emergency cut-out button on control panel.

Construction

- Grinding ring in 304 AISI stainless steel, 4/5 mm in spacing to provide small food particles.
- Grinding teeth positioned at the same height to maximize cutting performance and speed.
- Two pivoted stainless steel cutting blades to avoid blockage.
- Internal filter in stainless steel to have 1 mm holes to allow only water to filter out of the slurry and into the drain.
- External cleaning shower to aid appliance washing procedure.

Waste Management System
Free Standing Compact Integrated Pulper - 300 kg/hour

Front

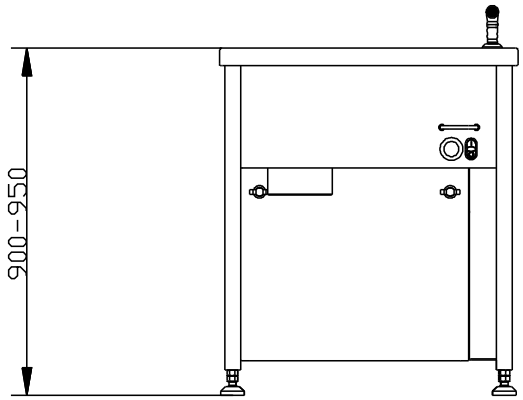

Side

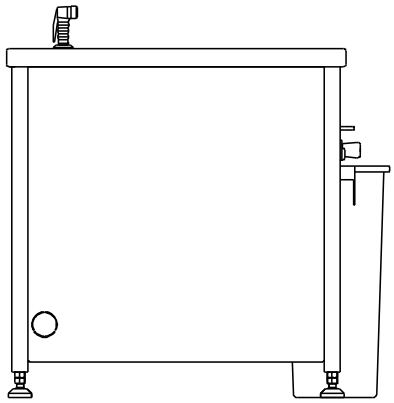

CWI1	=	Cold Water inlet 1 (cleaning)
D	=	Drain
EI	=	Electrical inlet (power)
EO	=	Electrical Outlet
HWI	=	Hot water inlet
WI	=	Water inlet

Top

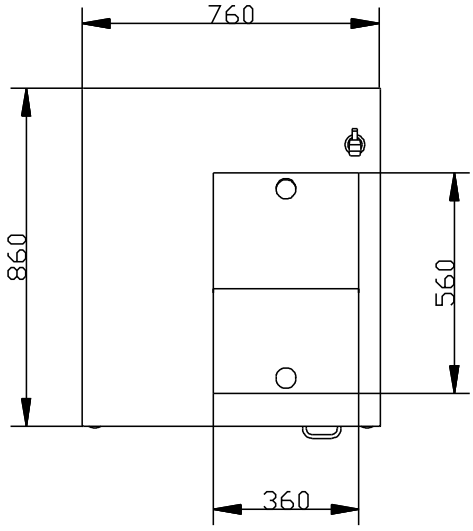

Electric

Supply voltage:	
616020 (WMSCP30F)	400 V/3N ph/50/60 Hz
Total Watts:	3.3 kW

Key Information:

Performance:	300 kg\hr
External dimensions, Width:	760 mm
External dimensions, Depth:	860 mm
External dimensions, Height:	950 mm
Net weight:	219 kg

The company reserves the right to make modifications to the products without prior notice. All information correct at time of printing.

2024.10.06